MASTERPIUMA 3

INCISIONE A SPINTA
P
PUSH VERSION

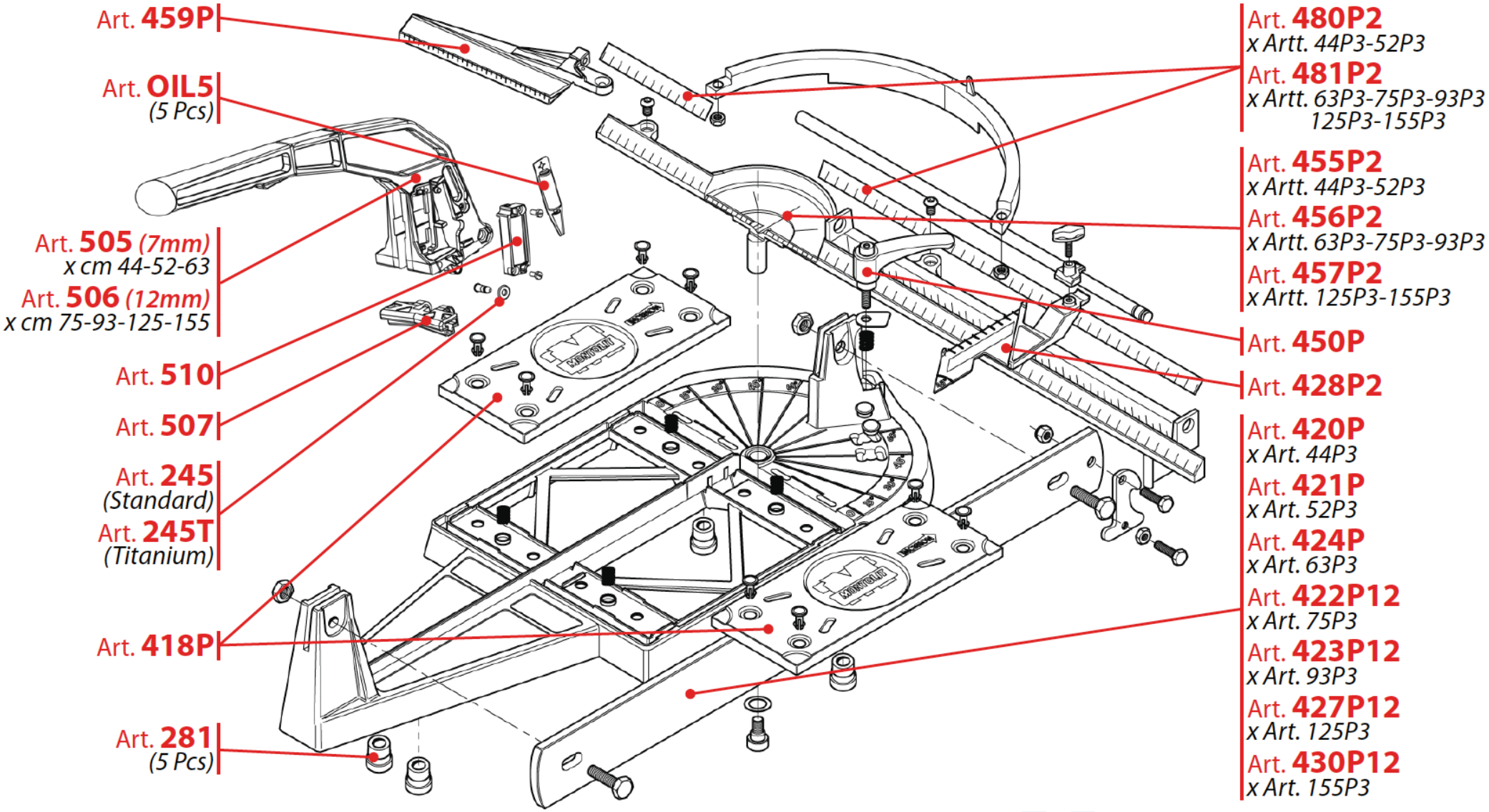

BREVETTI MONTOLIT SINCE 1946 S.p.A.